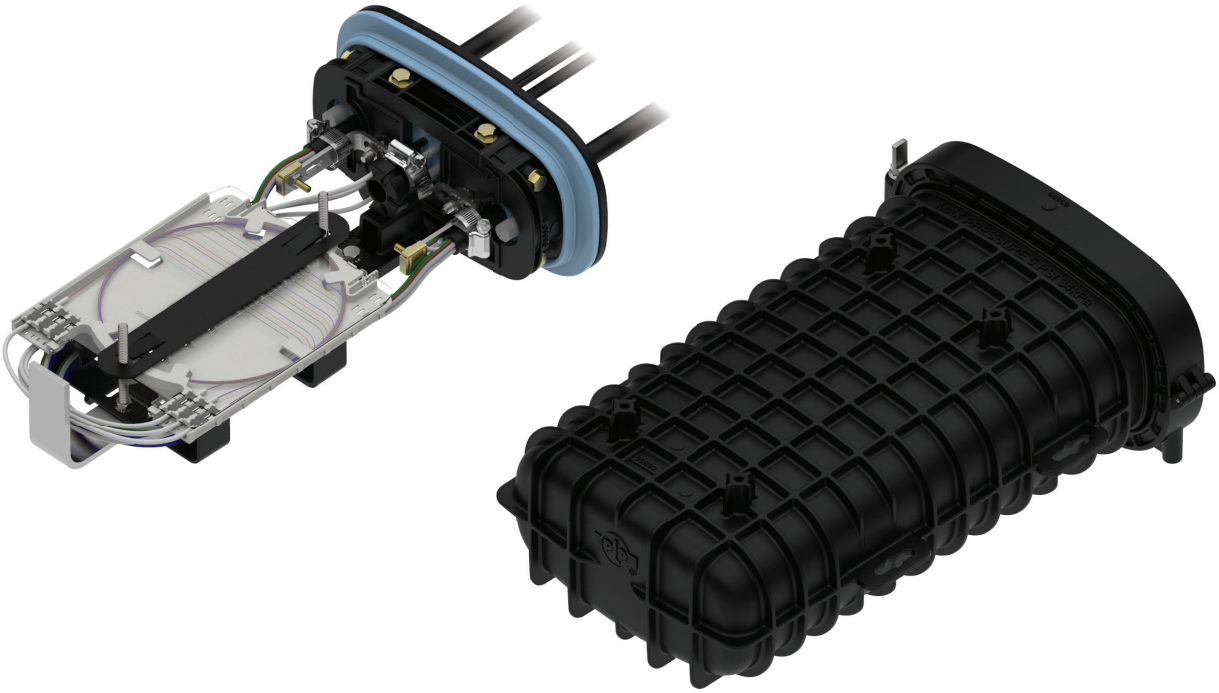

COYOTE® ONE DOME CLOSURE

The **COYOTE ONE Dome Closure** has two organizer types to support either buffer tube or ribbon applications. These closures utilize PLP's patented segmented end plate design, which allows for independent access of each cable port without disturbing previously installed cables. This design also allows for ease of upgrading to a larger size without breaking the spliced joint, as your network continues to grow.

FEATURES AND BENEFITS

- 3-Port segmented end plate design provides independent access to each cable port without disrupting the surrounding cables
- Tray design allows the removal from the stack to enable multiple splicers to work simultaneously
- Multiple splice tray designs support mass fusion splicing, single fusion splicing, or a combination of both
- Flexible grommet sealing technology supports a wide range of flat and round cable profiles
- Designed and tested in accordance with Telcordia® GR-771-CORE Buried, Underground, IP-68 Rated Requirements

Telcordia® is a registered trademark of Telcordia Technologies, Inc., now part of Ericsson.

BUFFER TUBE APPLICATIONS

Specifications

Catalog Number	COY1-001
Splice Capacity (Maximum) – Single Fusion (Low Profile, 80809958), Single Fusion (Low Profile, 80813152), Single Fusion (Deep Profile, 80808945)	96, 144, 80
Number of Splice Trays – 80809958, 80813152, 80808945	4, 4, 2
Cable Ports[1]	3
Cable Diameters	0.093" – 0.85" (2.4 – 21.6 mm) and Flat Drop
Ground Studs	3
Configuration	Butt
Application	Direct Bury, Below Grade, Pole/Wall, Aerial
Ingress Protection	In accordance with Telcordia® GR-771-CORE, Buried, Underground; IP-68
Size[2]	16.0" L x 10.8" W x 5.7" H (406 x 274 x 145 mm)

[1] Multi-hole grommets allow for more than one cable to enter each cable port.
[2] Outermost part of the assembly; includes the sealing collar.

ORGANIZER ASSEMBLY

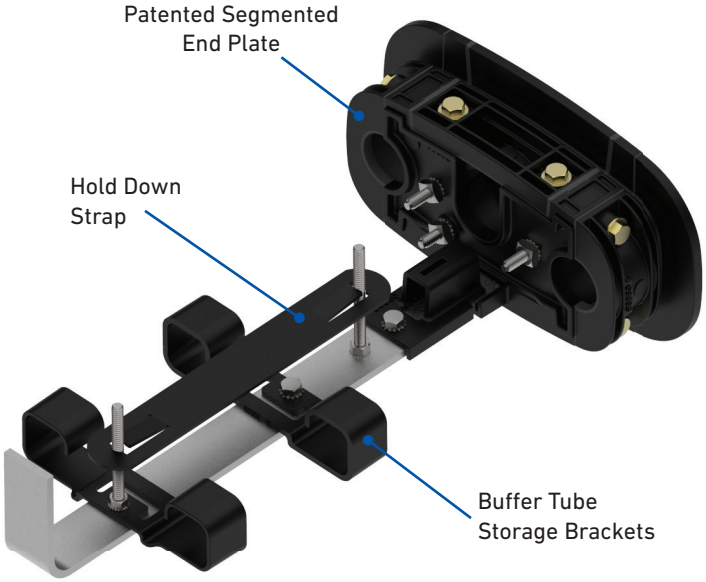

Buffer Tube Organizer
Catalog Number: COY1-001

COYOTE ONE Dome Closure Kit Contents

Catalog Number	Description
COY1-001	COYOTE ONE Dome Closure for Buffer Tube – Includes (2) 2-Hole Grommets 0.42" – 0.60" (10.7 – 15.2 mm), and (1) 6-Hole Grommet 0.125" – 0.250" (3.2 – 6.4 mm) and Flat Drop Cables

All kits include (1) COYOTE ONE End Plate with Organizer, (1) Dome, (1) Gasket, (1) Collar, (2) 2-Hole Grommets, (1) 6-Hole Grommet and Cable Restraint Hardware (Splice Trays and Hanger Brackets Sold Separately).

Telcordia® is a registered trademark of Telcordia Technologies, Inc., now part of Ericsson.

UNITUBE OR BUFFER TUBE APPLICATIONS

Specifications

Catalog Number	COY1-002
Splice Capacity (Maximum) – Single Fusion (Low Profile, 80809958), Single Fusion (Low Profile, 80813152), Single Fusion (Deep Profile, 80808945), Mass Fusion (Deep Profile, LGSTR144)	72, 108, 80, 288
Number of Splice Trays – 80809958, 80813152, 80808945, LGSTR144	3, 3, 2, 2
Cable Ports[1]	3
Cable Diameters	0.093" – 0.85" (2.4 – 21.6 mm) and Flat Drop
Ground Studs	3
Configuration	Butt
Application	Direct Bury, Below Grade, Pole/Wall, Aerial
Ingress Protection	In accordance with Telcordia® GR-771-CORE, Buried, Underground; IP-68
Size[2]	16.0" L x 10.8" W x 5.7" H (406 x 274 x 145 mm)

[1] Multi-hole grommets allow for more than one cable to enter each cable port.
[2] Outermost part of the assembly; includes the sealing collar.

ORGANIZER ASSEMBLY

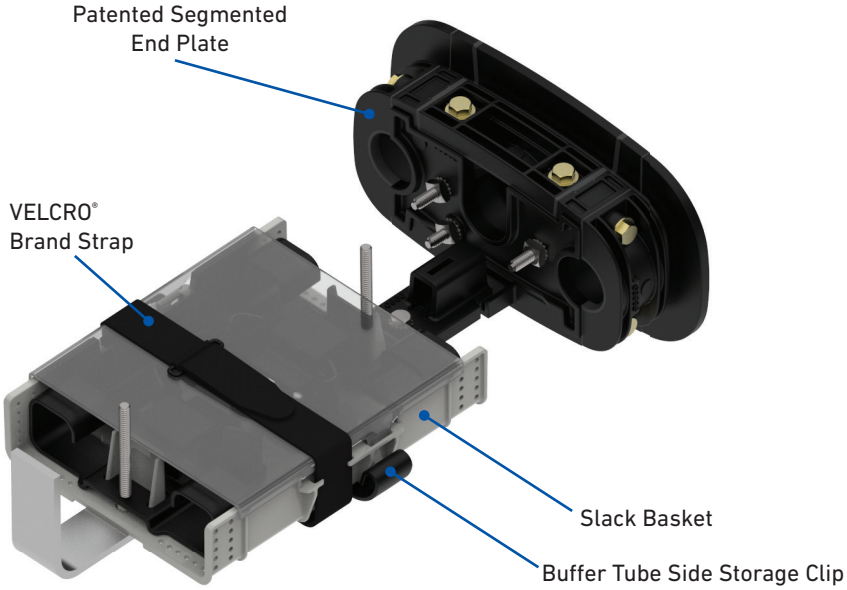

Universal Organizer
Catalog Number: COY1-002

COYOTE ONE Dome Closure Kit Contents

Catalog Number	Description
COY1-002	COYOTE ONE Dome Closure for Buffer Tube or Ribbon – Includes (2) 2-Hole Grommets 0.42" – 0.60" (10.7 – 15.2 mm), (1) 6-Hole Grommet 0.125" - 0.250" (3.2 - 6.4 mm) and Flat Drop Cables, and (1) Transition Tubing Kit

All kits include (1) COYOTE ONE End Plate with Organizer, (1) Dome, (1) Gasket, (1) Collar, (2) 2-Hole Grommets, (1) 6-Hole Grommet and Cable Restraint Hardware (Splice Trays and Hanger Brackets Sold Separately).

Telcordia® is a registered trademark of Telcordia Technologies, Inc., now part of Ericsson.
VELCRO® Brand is a registered trademark of Velcro BVBA.

ACCESSORIES AND MOUNTING BRACKETS

COYOTE ONE Dome Closure Accessories

Catalog Number	Description
80809958	Splice Tray, COYOTE LITE-GRIP® Short, Low Profile, 24 CT., Single Fusion
80813152	Splice Tray, COYOTE LITE-GRIP Short, Low Profile, 36 CT., Single Fusion
80808945	Splice Tray, COYOTE LITE-GRIP Short, Deep Profile, 40 CT., Single Fusion
LGSTR144	Splice Tray, COYOTE LITE-GRIP Short, Deep Profile, 144 CT., Mass Fusion
8004160	Heat Shrink Splice Protector Kit – Includes (50) 40 mm Mass Fusion
8004095	Heat Shrink Splice Protector Kit – Includes (50) 40 mm Single Fusion
8003717	Heat Shrink Splice Protector Kit – Includes (50) 60 mm Single Fusion
80810072	Cross-Connect Bulkhead
80809205	Strength Member Bracket Kit – Includes (2) Short L-Brackets
80811037	4-Port Cable Retention Bobbin Kit
80811036	6-Port Drop Cable Retention Bobbin Kit
80812928	6/8-Port Drop Cable Retention Bobbin Kit

COYOTE ONE Dome Closure Mounting Brackets

Catalog Number	Description
EVOBKT–ALC	Aerial Low Clearance Mounting Bracket – Strand Applications
8004031	Aerial Low Clearance Mounting Bracket – ADSS Applications
EVOBKT–AE	Aerial Adjustable Offset Mounting Bracket – Strand Applications
8004032	Aerial Adjustable Offset Mounting Bracket – ADSS Applications
EVOBKT–PWM	Pole/Wall Mounting Bracket
8003835	Universal Mounting Bracket – Handhole Applications
8004003	Manhole Support Bracket

DIMENSIONS

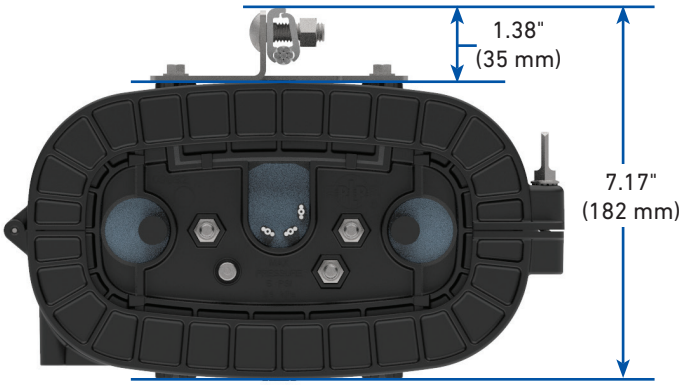

COYOTE ONE with Aerial Low Clearance Mounting Brackets for Strand Applications
Catalog Number: EVOBKT-ALC

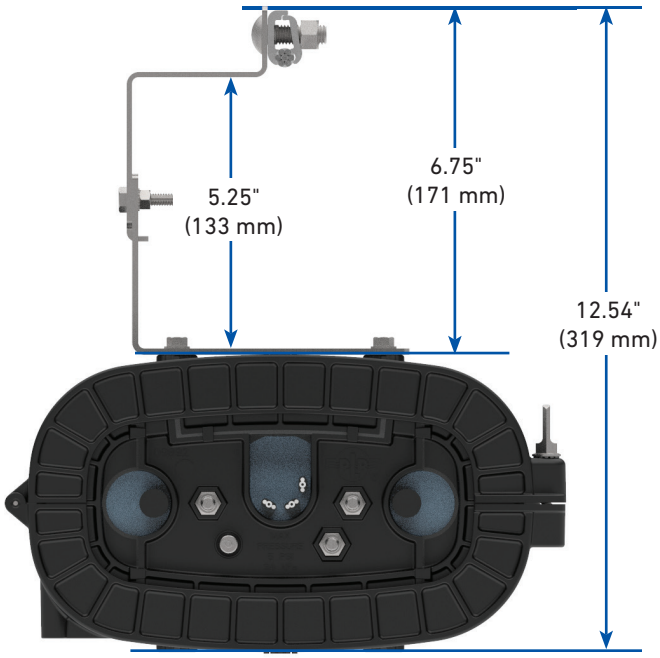

COYOTE ONE with Aerial Adjustable Offset Mounting Brackets for Strand Applications
Catalog Number: EVOBKT-AE