PREFORMED LINE PRODUCTS
The connection you can count on.

JUNE 2011

Optical Tension Device (OTD)

For OPGW Fiber Cable

Be sure to read and completely understand this procedure before applying product. Be sure to select the proper PREFORMED™ product before application.

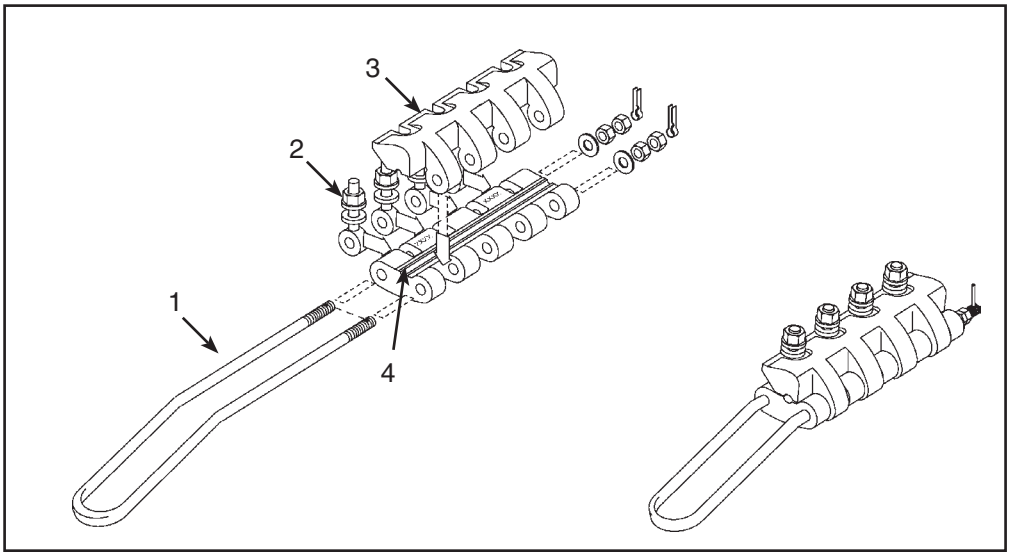

NOMENCLATURE

1. Bail
2. Eye Bolts
3. Clamp Housing
4. Conductor Groove

MATERIALS:

Body: High Strength Aluminum Alloy
Bolts: High Strength Forged Steel
Bail: High Strength Steel

General Information: The Optical Tension Device (OTD) is designed for pulling OPGW fiber cable to final sag tension. Once the final sag has been achieved, a permanent dead-end device should be installed promptly, followed by the removal of the OTD. The OTD should not be subjected to sag tension for an extended time period and it should never be utilized as a permanent dead-end device.

Installation Instructions: When installing the OTD, partially tighten successive eye bolts in the following torque sequence:

First Sequence to 20 ft/lbs.

Second Sequence to 30 ft/lbs.

Final Torque to 40 ft/lbs.

OPGW Cable Range:
8.890 – 20.820 mm 0.350 – 0.820 inches

Load Rating: 50% of the rated cable breaking strength or 5000 lbs. (22.4 kN) whichever is less.

Ordering Guidelines: **OTD – X – XXX**

OPGW Supplier
- A – Alcoa - Fujikura
- B – Brugg
- C – Siemans
- P – Prysmian
- S – SFPOC
- O – Other

Cable Diameter (in inches)

Safety Tips:

- Check for cracks and chipped areas along the cable groove and eyebolt areas. Do not reuse if any of these conditions exist
- Eyebolts should be kept clean and lubricated
- Conductor grooves should be clean and dry

After six months use and prior to each job, all Optical Tension Devices should be subjected to a pull test equal to its rated strength. If any damage is found, the OTD should be disposed of or sent to PLP for possible rework and re-qualification.

SAFETY CONSIDERATIONS

This application procedure is not intended to supersede any company construction or safety standards. This procedure is offered only to illustrate safe application for the individual.
FAILURE TO FOLLOW THESE PROCEDURES MAY RESULT IN PERSONAL INJURY OR DEATH.

Do not modify this product under any circumstances.

This product is intended for the trained technicians only. **This product should not be used by anyone who is not familiar with, and trained in the use of it.**

When working in the area of energized lines, extra care should be taken to prevent accidental electrical contact.

For proper performance and personal safety, be sure to select the proper size PREFORMED product before application.

PREFORMED products are precision devices. To insure proper performance, they should be stored in cartons under cover and handled carefully.

PREFORMED LINE PRODUCTS

P.O. Box 91129, Cleveland, Ohio 44101 • 440.461.5200 • www.preformed.com • e-mail: inquiries@preformed.com

© 2011 Preformed Line Products. All rights reserved.