PREFORMED LINE PRODUCTS
The connection you can count on.

COYOTE® DTC4/DTC6 (Drop Termination Closure)

4/6 Grommet Design

COMMUNICATIONS ENERGY SPECIAL INDUSTRIES SOLAR

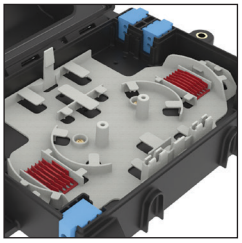

PLP® Fiber Optic Products

COYOTE® DTC4/DTC6 (Drop Termination Closure)

DTC4 - 2 grommets per end

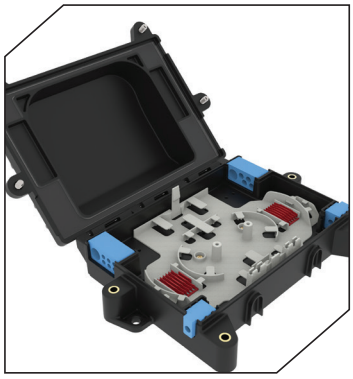

DTC4 - Splice only

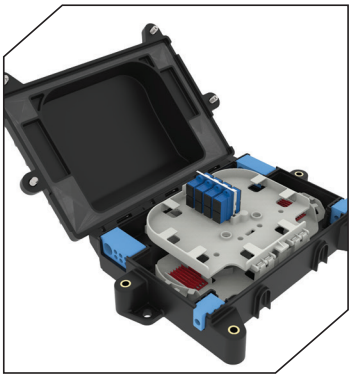

DTC4 - Splice + Bulkhead

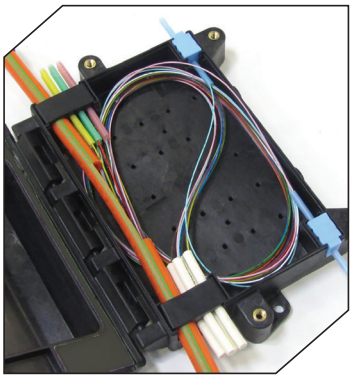

DTC4 - Duct Transition

Description

Identifying closure systems to protect the final connection point in your FTTH network is critical. Selecting one packed with features to support splicing, connectivity or ducting applications, using traditional cable, blown fiber, pushable drop cable technology or microtube cable, with a footprint slightly larger than a splice tray, has been impossible; until now.

The COYOTE DTC4 and DTC6 are the latest additions to the DTC (Drop Termination Closure) Family. Like the original DTC, these closures offer a durable, compact solution with multiple internal fiber organizers to support your current and future needs. Network evolution is unpredictable so why not choose a closure system developed to adapt.

Key Features:

- **Size:** 10.8" x 7.8" x 3.2" (274 x 198 x 82 mm)
- **Max Splice Capacity:** 24
- **Max Adapter Capacity:** See table for adapter options
- **Grommet Quantity:** 4 or 6 – See table for grommet options
- Flexible grommet sealing system supports a wide range of flat or round cable profiles
- Factory installed sealing materials
- Reenterable and reusable
- Designed to GR-771 Generic Requirements for Fiber Splice Closures
- Constructed with flame retardant UV stabilized material
- **Applications:**
  - DTC4 - IP-68 rated
    - Aerial, below grade, direct buried, pole mount or interior applications
  - DTC6 - IP-68 rated
    - Aerial, below grade, direct buried, pole mount or interior applications

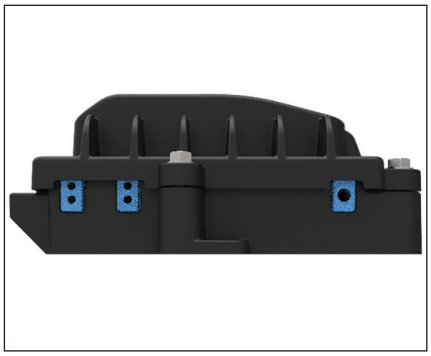

DTC6 - 3 grommets per end

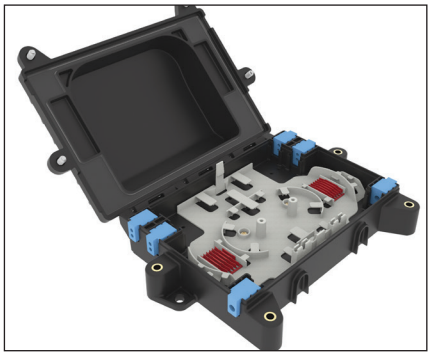

DTC6 - Splice only

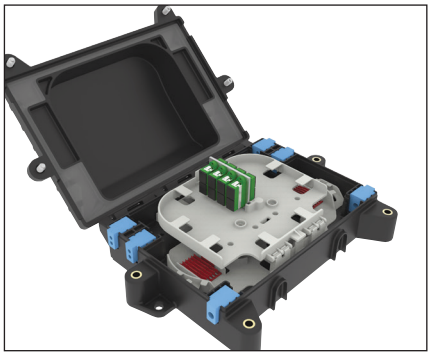

DTC6 - Splice + Bulkhead

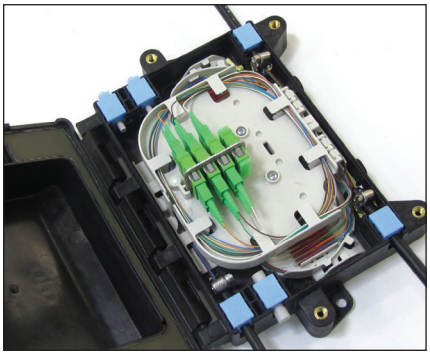

DTC6 - Splice + Bulkhead

PLP® Fiber Optic Products

COYOTE® DTC4/DTC6 (Drop Termination Closure) Installation Environments

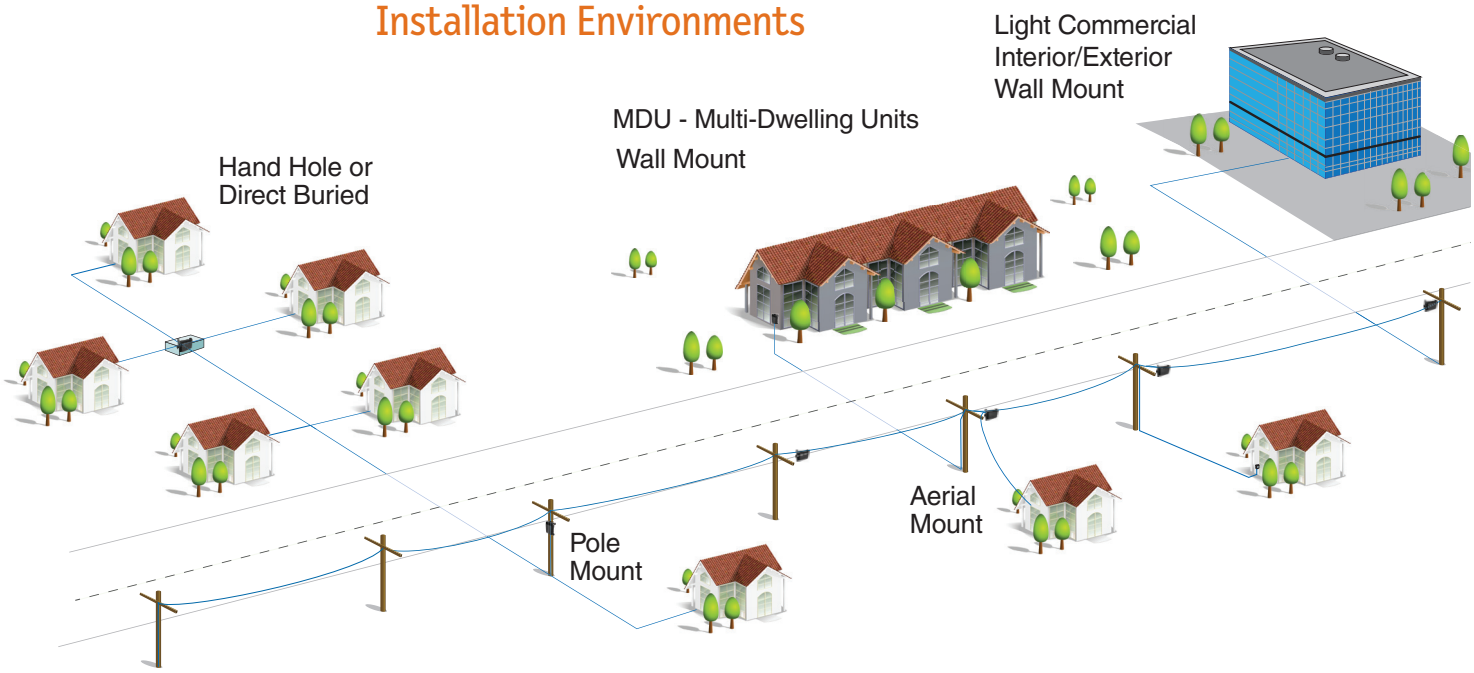

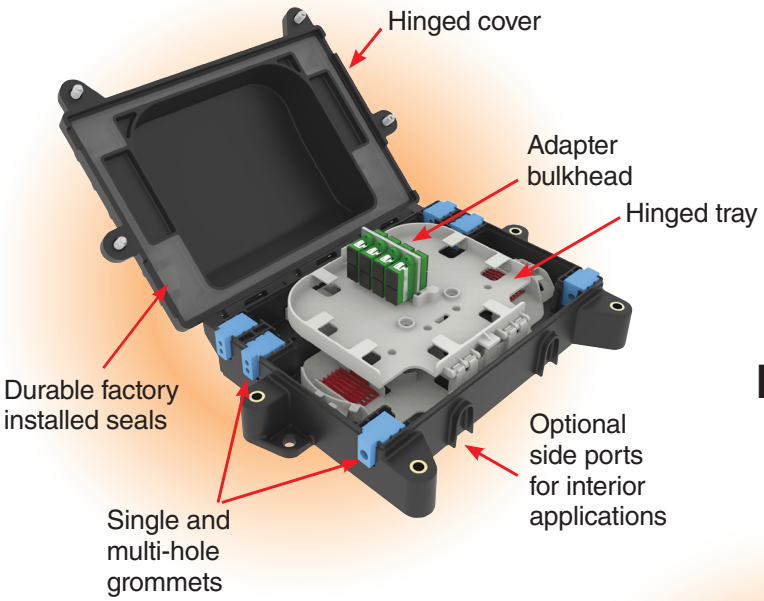

DTC6

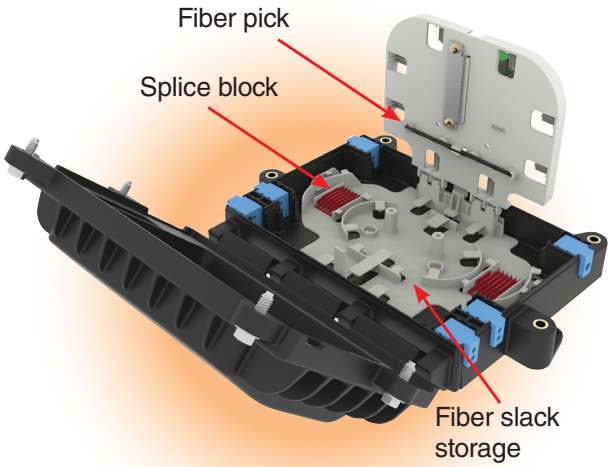

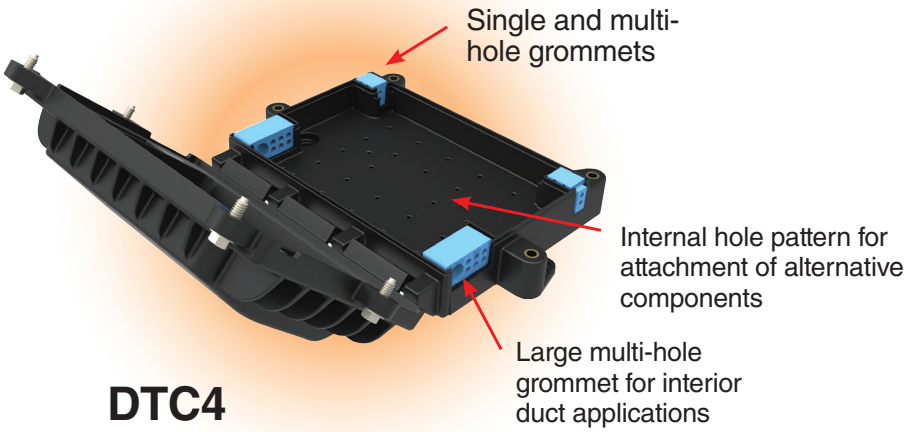

DTC4

COYOTE® DTC4 Ordering Instructions

Catalog Number Example: DTC4-AA-DD-2-1-2-N

DTC4 – xx – xx – x – x – x – x

Large Grommet Select 2		Cable Diameter Range
A		5 Hole Design 1 Hole – .55" - .60" (14 - 15 mm) 4 Holes –.275" (7 mm)
B		7 Hole Design 1 Hole – .55" - .60" (14 - 15 mm) 6 Holes–.197" (5 mm)

Branch / Drop Grommet Select 2		Cable Diameter Range
A		SOLID / PLUG
B		.170" - .250" (4.3 - 6.4 mm) ROUND CABLES
C		.250" - .350" (6.4 - 8.9 mm) ROUND CABLES
D		.156" - .170" (4.0 - 4.3 mm) ROUND CABLES
E		.093" - .125" (2.4 - 3.2 mm) ROUND CABLES
F	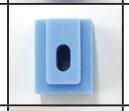	FLAT DROP CABLES
G		.350" - .420" (8.9 - 10.7 mm) ROUND CABLES

Organizer Options Select 1	
N	NONE
1	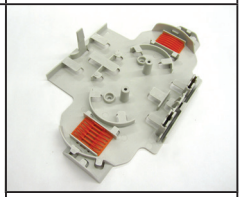
	Splice Only
2	
	Splice + Adapters

Adapter Type Select 1	
N	NONE
1	Dual SCAPC
2	Dual SCUPC
3	Quad LCAPC
4	Quad LCUPC

Adapter Quantity
0 to 4

Pigtails Required Select 1 (Matches adapter type and quantity)	
N	NONE
Y	

COYOTE® DTC6 Ordering Instructions

Branch / Drop Grommet Select 6	Cable Diameter Range

Organizer Options Select 1

Adapter Type Select 1

Adapter Quantity

Pigtails Required Select 1 (Will match adapter type and quantity)

DTC6 – xxxxxx – x – x – x – x

Catalog Number Example: DTC6-AABBDD-2-2-2-Y

Accessories

Catalog No.	Description
8004109	DTC4/6 Pole/Wall Mount Bracket
8004110	DTC4/6 Cable Storage Bracket Kit
8004111	DTC4/6/8 Aerial Strand Bracket
8004112	DTC4/6/8 ADSS Bracket

PREFORMED LINE PRODUCTS

World Headquarters 660 Beta Drive Cleveland, Ohio 44143 Mailing Address: P.O. Box 91129 Cleveland, Ohio 44101
Telephone: 440.461.5200 Fax: 440.442.8816 www.preformed.com E-mail: inquiries@preformed.com
© 2016 Preformed Line Products Printed in U.S.A. CO-SS-1146-2 04-16-IH